WOHLER AMP1-V2DA

Compact, High Quality, 4 Channel, Analog & AES/EBU Self-Powered Speaker System

Rear Panel:

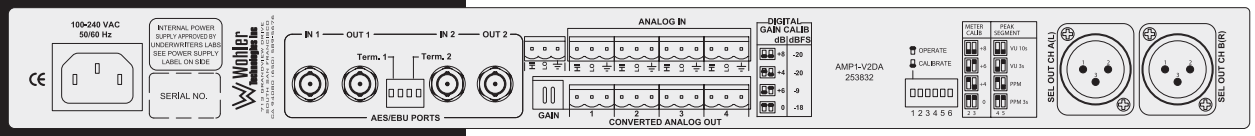

System Diagram:

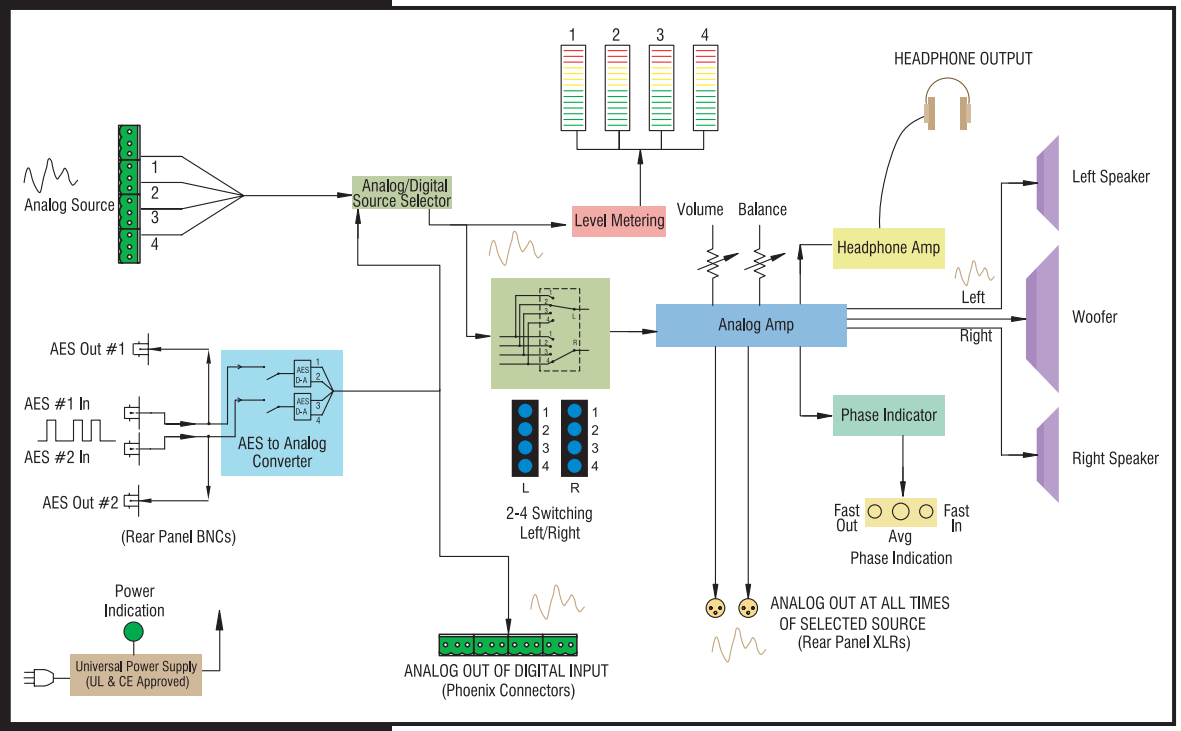

Specifications:

Analog input	4 balanced analog inputs, phoenix terminals
AES/EBU input	2 unbalanced simultaneous AES/EBU inputs, BNC
Analog output	4 balanced (phoenix terminals) analog outputs from AES/EBU inputs. Balanced (XLR) analog output of 2 selected channels
AES/EBU output	2 unbalanced AES/EBU loop-through of unbalanced EAS/EBU inputs, BNC
Level meters	4 x 26 segment
Level meter scale	+12 to -50 dB
Level meter threshold	0, +4, +6 or +8dBv - DIP switch selectable
Level meter dynamics	Simultaneous VU & PPM
Midscale resolution	2dB
Peak acoustic output @ 2 feet	98dB SPL
Power output	RMS each side (2 Ohms) - 5W, 7W peak RMS center WOOFER (4 Ohms) - 11W, 16W peak
Frequency response (1/6 octave)	80Hz - 20kHz (±5dB) (-10dB @ 50Hz, 22kHz)
Analog input impedance	>40 kOhms balanced
AES/EBU input termination	75 Ohms unbalanced
AES/EBU input sampling rate	32-48kHz, auto-detecting
Hum and noise	better than -68dB below full output
Electrical distortion	<0.15% at any level below limit threshold
Acoustic distortion	8% or less worst case frequencies above 180Hz including cabinet resonance, typically <2%
Magnetic shielding	<0.5 gauss any adjacent surface
Power consumption (AVG. MAX.)	30W
Dimensions (HxWxD)	1.75 x 19 x 12" (44.5 x 483 x 305mm)
Weight	9.5lbs (4.3kg)
Power Supply	100 to 240VAC, 50/60Hz universal input CE and UL approved

All specifications are subject to improvement

Wohler

Toll Free (US): 1-888-5-WOHLER Tel: (650) 589-5676 Fax: (650) 589-1355
713 Grandview Drive, South San Francisco, California 94080, USA
www.wohler.com • sales@wohler.com